DKC

RAM BLOCK

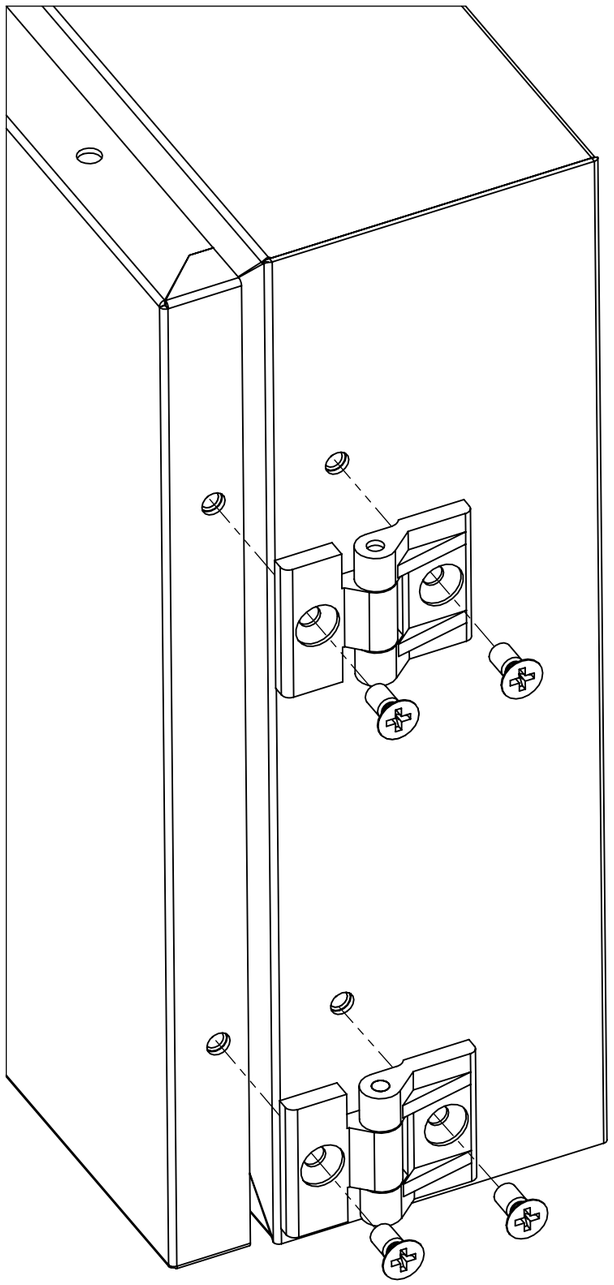

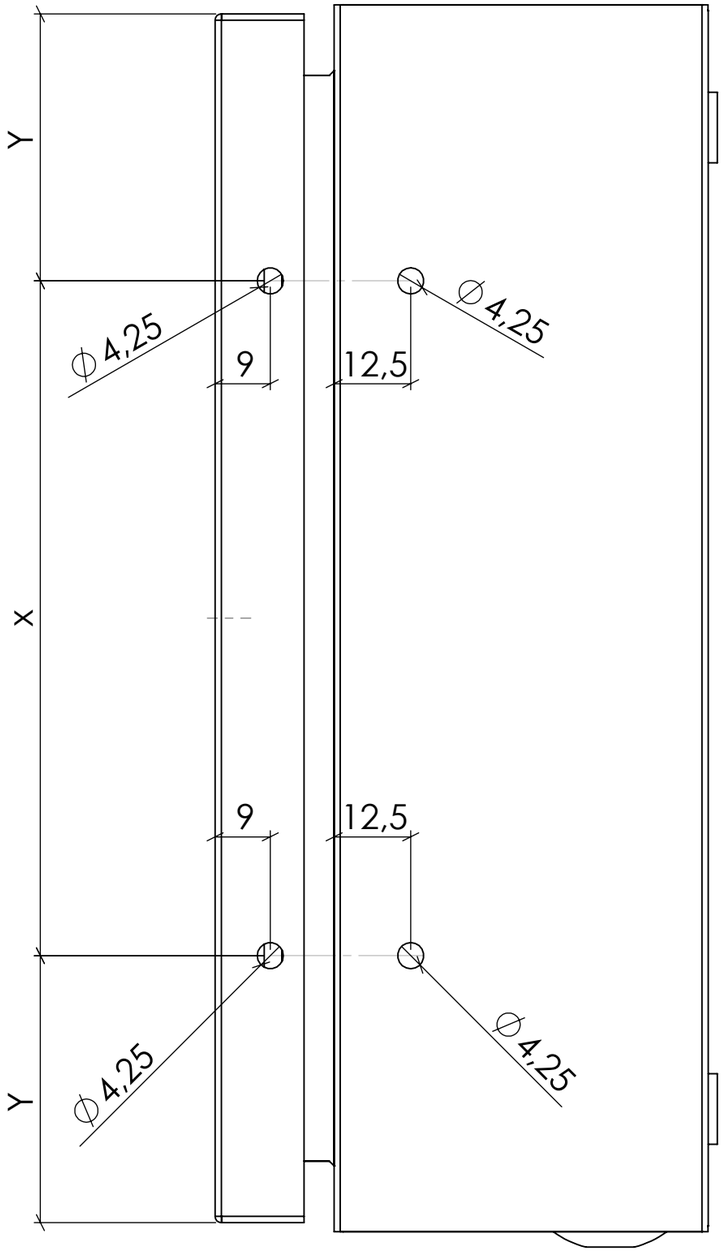

A

RZCDA02